COMMON

ROTARY GAS METER

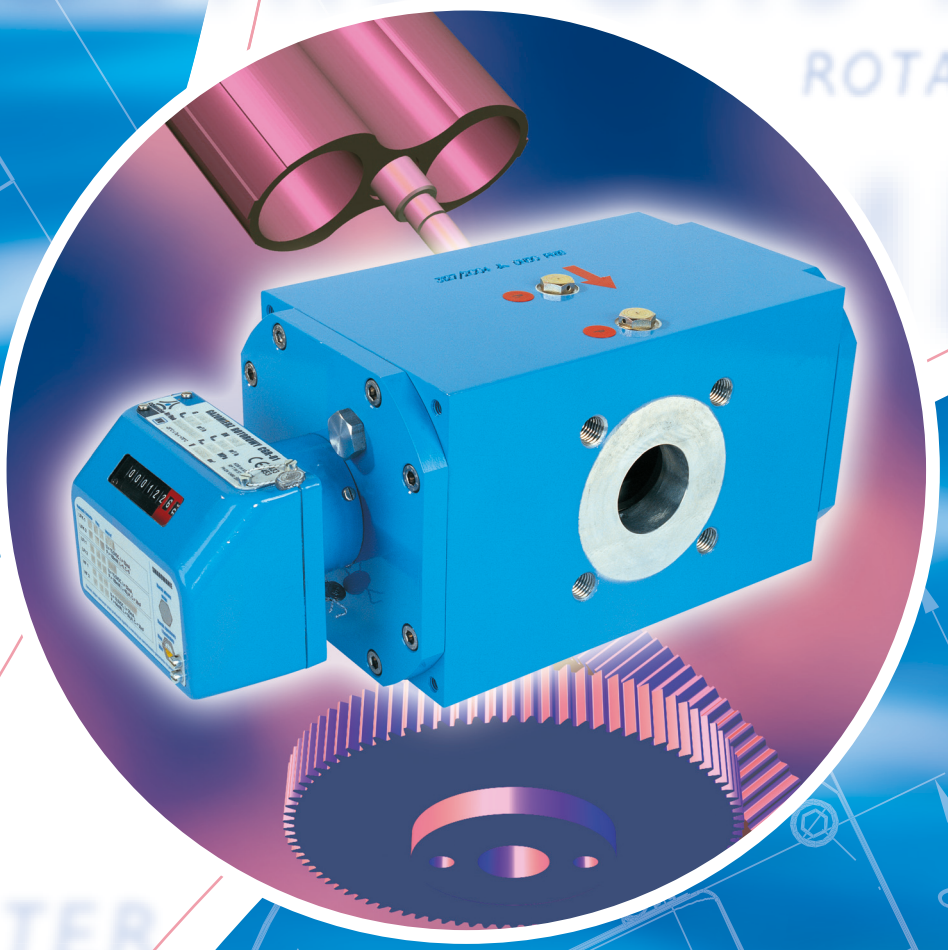

1 DESIGN AND FUNCTION

Rotary gas meters are positive displacement meters, designed to measure quantity of gas, for custody transfer or technical measurement applications.
The CGR Rotary Gas Meters are used in measurement systems where high accuracy is required:

- transportation of natural gas
- primary and secondary measurements
- control metering of natural gas and non aggressive technical gases in industry
- flow measurement for technical purposes

Majority of applications are regional or local gas stations. While being very precise instruments, resistant to disturbances and having a wide measurement range, the CGR Rotary Gas Meters satisfy all technical demands of customers.

Gas flowing through the rotary gas meter measurement chamber makes the two "8"-shaped rotors to turn. The gear train, and the incorporated gas tight and hermetic magnetic coupling, transfers rotation of rotors to the index unit, which is separated in that way from the pressure tight housing. The actual volume of gas is indicated on the mechanical counter.
The measurement cartridge, as a separate unit, is fixed in the pressure resistant housing by means of elastomer gaskets. Thanks to this, the possible stresses, e.g. arising from improperly aligned piping, have no influence on measurement results of the CGR Rotary Gas Meter.
Moreover, these measuring cartridge elements are made of materials with carefully selected values of thermal expansion coefficients.
This minimizes temperature stresses that could cause the rotor seizures.
All above factors, together with the highest precision machining of parts allow to reduce small but necessary clearances between the moving rotors and the measurement chamber walls, which reduces gas leakages to minimum and results in very high accuracy and wide measuring ranges of our CGR Rotary Gas Meters.
All parts subject to servicing or maintenance, like mechanical counter, LF (HF) sockets, oil filler and drain plugs (oil level sight-glass), are located on the front of the meter. Thanks to this, it is not necessary to access the back of the CGR meter and thus it can be located very close to a wall or other construction element which reduces the installation depth.

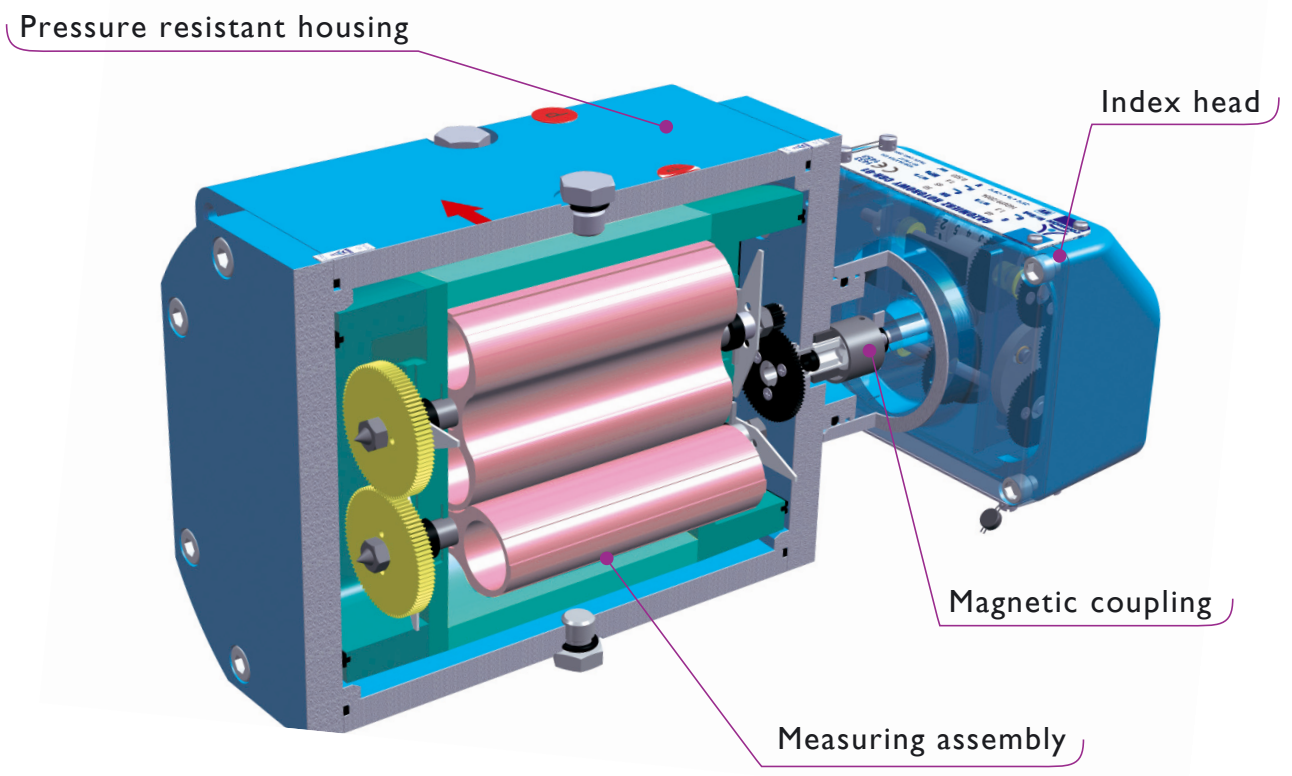

GENERAL TECHNICAL DATA

table 1:

DN mm	G	Q_{max} Maximum flow [m³/h]	Q_{min} Minimum flow [m³/h] (at atmospheric pressure)						LF [pulse /m³]	HF (aproximately) [pulse /m³]	V cyclic volume [dm³]	Series
			1:50	1:65	1:100	1:160	1:200	1:250				
40/50	G10p	16	0,3	0,25	0,16	-	-	-	10	15459	0,23	„171"
	G16p	25	0,5	0,4	0,25	0,16	-	-	10	15459	0,23	„171"
	G16w	25	0,5	0,4	0,25	0,16	-	-	10	11470	0,31	„171"
	G25s	40	0,8	0,65	0,4	0,25	0,2	0,16	10	15459	0,23	„171"
	G25p	40	0,8	0,65	0,4	0,25	0,2	0,16	10	11470	0,31	„171"
	G25w	40	0,8	0,65	0,4	0,25	-	-	10	7111	0,50	„171"
	G40s	65	1,3	1,0	0,65	0,4	0,3	0,25	10	11470	0,31	„171"
	G40p	65	1,3	1,0	0,65	0,4	0,3	0,25	10	7111	0,50	„171"
	G40w	65	1,3	1,0	0,65	0,4	-	-	10	4390	0,81	„171"
50/80	G65s	100	2,0	1,6	1,0	0,65	0,5	0,4	10	7111	0,50	„171"
	G65p	100	2,0	1,6	1,0	0,65	0,5	0,4	10	4390	0,81	„171"
	G65w	100	2,0	1,6	1,0	0,65	-	-	10	2867	1,24	„171"
	G100s	160	3,2	2,5	1,6	1,0	0,8	0,65	1	4390	0,81	„171"
	G100p	160	3,2	2,5	1,6	1,0	0,8	0,65	1	2867	1,24	„171"
80/100	G100p	160	3,2	2,5	1,6	1,0	0,8	0,65	1	1654	1,29	„241"
	G100w	160	3,2	2,5	1,6	1,0	-	-	1	1067	2,00	„241"
	G160s	250	5,0	4,0	2,5	1,6	1,3	1,0	1	1654	1,29	„241"
	G160p	250	5,0	4,0	2,5	1,6	1,3	1,0	1	1067	2,00	„241"
	G160w	250	5,0	4,0	2,5	1,6	-	-	1	639	3,34	„241"
	G250s	400	8,0	6,5	4,0	2,5	2,0	1,6	1	1067	2,00	„241"
	G250p	400	8,0	6,5	4,0	2,5	2,0	1,6	1	639	3,34	„241"
100	G400s	650	13	10	6,5	4,0	3,2	2,5	1	639	3,34	„241"

p – basic version;
w – low speed version (bigger sizes, lower pressure drop, lower noise level),
s – high speed version (smaller sizes, higher pressure drop, higher noise level).

- pressure rating: PN16, ANSI150
- meter sizes: G10 up to G400
- nominal diameter: DN 40 up to DN 100
- meter body: Aluminium
- flow rate: 0,16 up to 650 m³/h
- flow directions: variable directions possible without any construction changes
- rangeability: up to 1:250, depending on the meter size
- temperature range: gas temperature -20°C to +60°C; ambient temperature -25°C to +70°C
- allowed medias: see table 2

measurement accuracy: EU requirements and better guaranteed at least: $Q_t - Q_{max} < \pm 1\%$

$Q_{min} - Q_t < \pm 2\%$

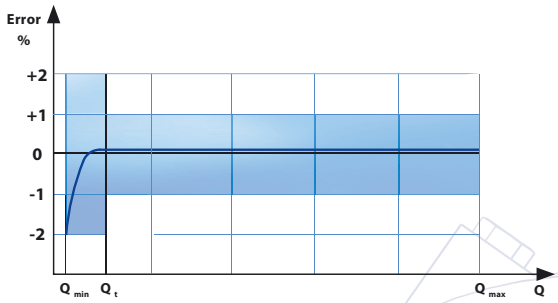

Q_t – transition flow

$Q_t = 0{,}1\ Q_{max}$ for rangeability 1:50

$Q_t = 0{,}05\ Q_{max}$ for rangeabilities bigger then 1:50

Gas	Chemical symbol (formula)	Density ρ [kg/m³]	Density related to air ρ_w	Gas meter execution
Argon	Ar	1,66	1,38	standard IIB
Butane	C_4H_{10}	2,53	2,10	standard IIB
Carbon dioxide	CO_2	1,84	1,53	standard IIB
Carbon monoxide	CO	1,16	0,97	standard IIB
Ethane	C_2H_6	1,27	1,06	standard IIB
Ethylene	C_2H_4	1,17	0,98	standard IIB
Helium	He	0,17	0,14	standard IIB
Methane	CH_4	0,67	0,55	standard IIB
Natural gas	-	~0,75	~0,63	standard IIB
Nitrogen	N_2	1,16	0,97	standard IIB
Propane	C_3H_8	1,87	1,56	standard IIB
Acetylene	C_2H_2	1,09	0,91	**special IIC**
Hydrogen	H_2	0,084	0,07	**special IIC**
Air	-	1,20	1,00	standard IIB

table 2: Physical properties of most popular gases that may be measured with the CGR Rotary Gas Meters - density at 101,325 kPa and at 20°C

3 MEASUREMENT OUTPUTS

PRESSURE AND TEMPERATURE OUTPUTS

Reference pressure (operating pressure) connection tap is located in the center of the housing and is marked “pr”. On the same side of the meter`s body there is another pressure tap for measuring the outlet pressure, if necessary. Same taps are also placed on the opposite side of the housing. For the measurement of the gas temperature, this gas meter can be optionally equipped with two temperature pockets located on the inlet side of the body. Same taps may also be placed on the opposite side of the housing.

PULSE SENSORS

The mechanical index unit indicates the actual volume of the measured gas at operating temperature and operating pressure. It can be rotated axially by 350° in order to facilitate readings and enable easier connection of pulse sensor plugs.
The index unit is provided with one low frequency LFK reed contact pulse transmitter, as a standard. On request the index unit may be equipped with:
- LFI inductive pulse sensors (NAMUR)
- HF inductive pulse sensors (NAMUR)

HF	LFI	LFK, AFK
U_i = 20 V DC	U_i = 20 V DC	U_i = 15,5 V DC
I_i = 60 mA	I_i = 60 mA	I_i = 52 mA
P_i = 80 mW	P_i = 130 mW	P_i = 169 mW
L_i = 150 µH	$L_i \approx$ 350 µH	$L_i \approx 0$
C_i = 150 nF	C_i = 250 nF	$C_i \approx 0$

table 3: Permissible supply parameters of intrinsically safe circuits.

fig. 1. Location of measurement outputs

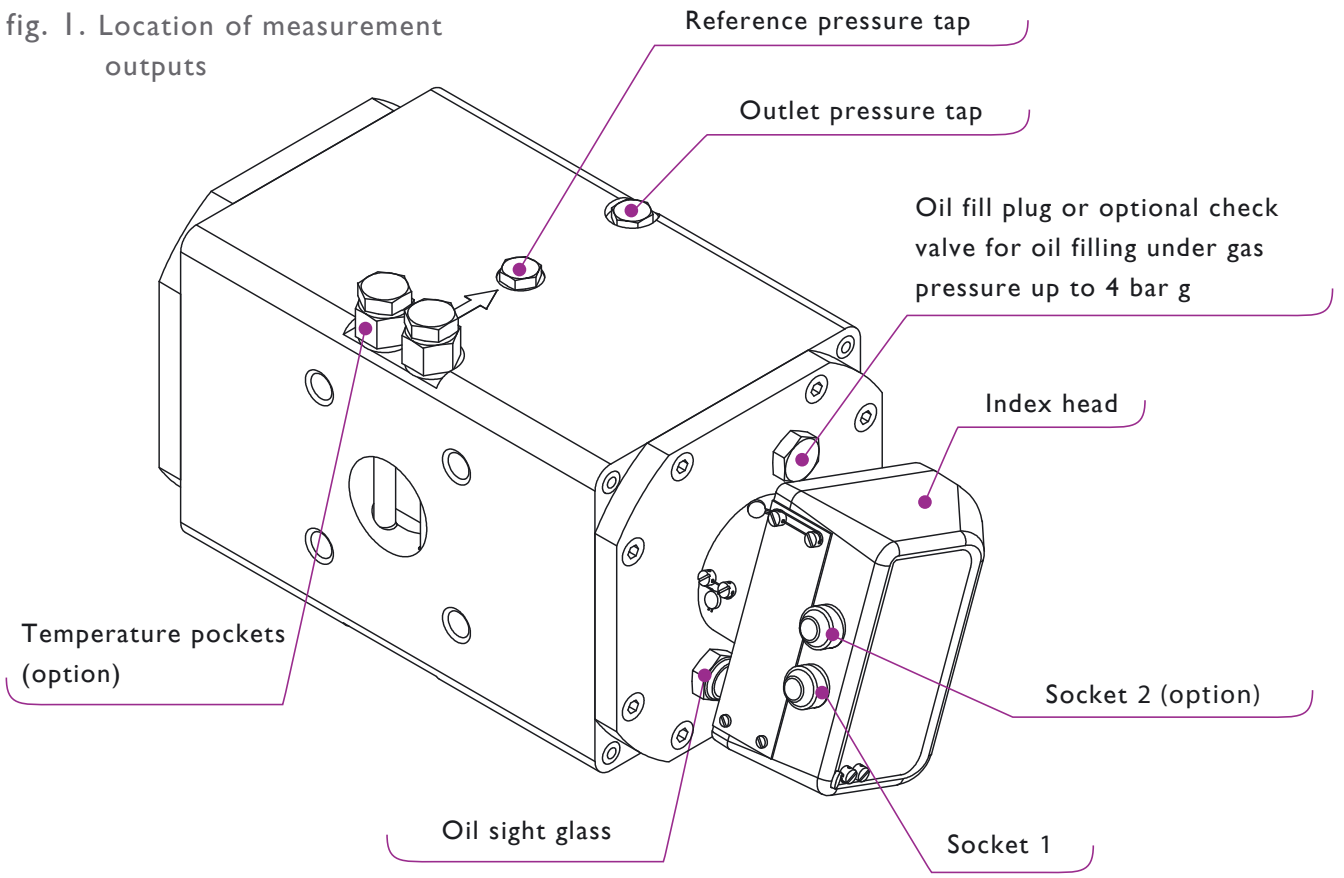

The CGR Rotary Gas Meters may be provided with up to 6 pulse sensors.

LFK	– low frequency reed contact pulse sensor	LFK1, LFK2
LFI	– low frequency inductive pulse sensor	LFI1, LFI2
HF	– inductive pulse sensor in the index unit	HF1, HF2
AFK	– anti-fraud reed contact	AFK

table 4: Pulse sensor pin numbering in sockets 1 and 2 installed in the index head

	PIN	polarity	LFK 1		LFK 2		AFK		LFI 1		LFI 2		HF 1		HF 2	
Socket 1	1	-	S			S			O							
	4	+		S						O						
	2	-			O		P		P		O				O	
	5	+				O		P		P		O				O
	3	-					O						P			
	6	+						O						P		
Socket 2	1	-			P				O							
	4	+				P				O						
	2	-			O		O				P				O	
	5	+				O		O				P				O
	3	-											O		P	
	6	+												O		P

S - standard connection
P - preferred connection
O – alternative connection

The sockets match the TUCHEL plug No C091 31H006 100 2

4 DIMENSIONS

The main dimensions and weights of the CGR Rotary Gas Meters are shown in table 4.

Series “171”

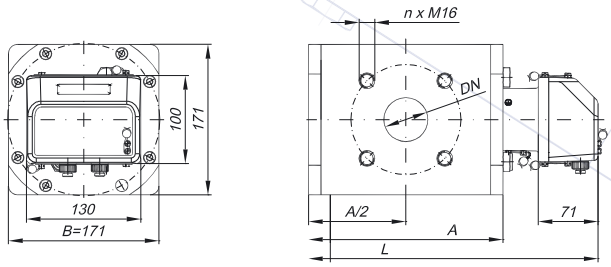

Series “241”

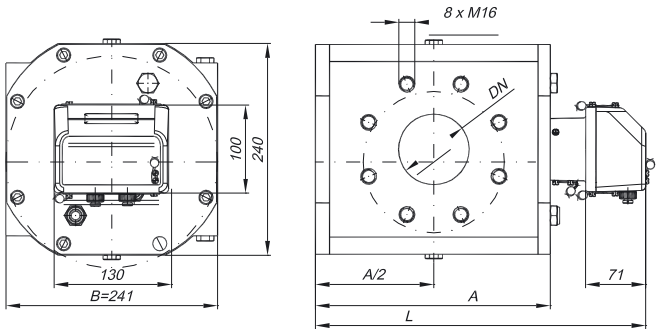

fig.2 Dimensions of the CGR Rotary Gas Meters

table 5:

	DN				n	A	B	L	Weight	Cyclic volume
	40	50	80	100		mm	mm	mm	kg	dm³
G10	+	+			4	165	171	277	10	0,23
G16p	+	+			4	165	171	277	10	0,23
G16w	+	+			4	184	171	296	12	0,31
G25s	+	+			4	165	171	277	10	0,23
G25p	+	+			4	184	171	296	12	0,31
G25w	+	+			4	225	171	337	14	0,50
G40s	+	+			4	184	171	296	12	0,31
G40p	+	+			4	225	171	337	14	0,50
G40w	+	+			4	295	171	407	19	0,81
G65s		+			4	225	171	337	14	0,50
G65p		+			4	295	171	407	19	0,81
G65w		+			4	391	171	503	24	1,24
G100s		+			4	295	171	407	19	0,81
G100p		+			4	391	171	503	24	1,24
G100s			+		8	295	171	407	19	0,81
G100p			+		8	391	171	503	24	1,24
G100p			+	+	8	249	241	356	25	1,29
G100w			+	+	8	314	241	421	31	2,00
G160s			+	+	8	249	241	356	25	1,29
G160p			+	+	8	314	241	421	31	2,00
G160w			+	+	8	439	241	546	42	3,34
G250s			+	+	8	314	241	421	31	2,00
G250p			+	+	8	439	241	546	42	3,34
G400s				+	8	439	241	546	42	3,34

p – basic version;
w – low speed version (bigger sizes, lower pressure drop, lower noise level),
s – high speed version (smaller sizes, higher pressure drop, higher noise level).

5 PRESSURE LOSS

The gas meter causes inevitable pressure loss. The value of pressure loss, for each meter size, was determined at Qmax maximum flow (for air at atmospheric conditions and density ρ_0 = 1,2 kg/m³), and is listed in table 6.

Please use the following formula in order to determine the pressure loss Δprz [Pa] in operating conditions:

$$\Delta p_{rz} = \rho_w \cdot \frac{p_a + p}{p_a} \cdot W_{pd} \cdot \Delta p$$

DEFINITION:

ρ_w = ρ / ρ_0 - relative gas density (relative to air) according to table 2,
p_a - atmospheric pressure ($p_a \cong 101$ [kPa]),
p - gauge pressure before meter inklet [kPa],
W_{pd} - pressure loss coefficient according to figure 6,
Δp - pressure loss at Q_{max} - from table 5 [Pa]

fig. 3 Pressure loss coefficient as a function of relative flow Q/Qmax.

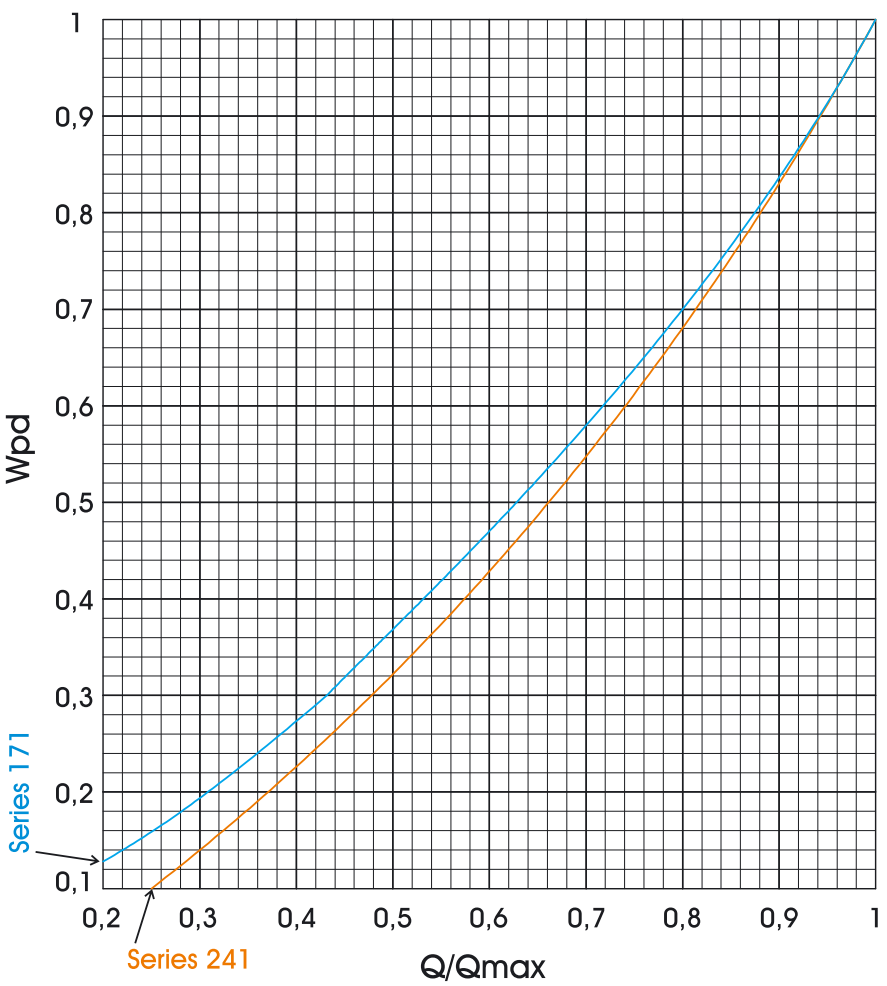

table 6: pressure loss at Q_{max}

DN mm	G	Δp pressure loss at Q_{max}
40 / 50	G10p	110 / 85
40 / 50	G16p	185 / 140
40 / 50	G16w	105 / 80
40 / 50	G25s	375 / 280
40 / 50	G25p	240 / 180
40 / 50	G25w	110 / 80
40 / 50	G40s	480 / 360
40 / 50	G40p	280 / 210
40 / 50	G40w	195 / 150
50 / 80	G65s	420 / 320
50 / 80	G65p	325 / 290
50 / 80	G65w	245 / 200
50 / 80	G100s	570 / 430
50 / 80	G100p	505 / 380
80 / 100	G100p	220 / 160
80 / 100	G100w	180 / 135
80 / 100	G160s	530 / 400
80 / 100	G160p	370 / 280
80 / 100	G160w	270 / 210
80 / 100	G250s	880 / 660
80 / 100	G250p	630 / 510
100	G400s	1100

YOUR PARTNER

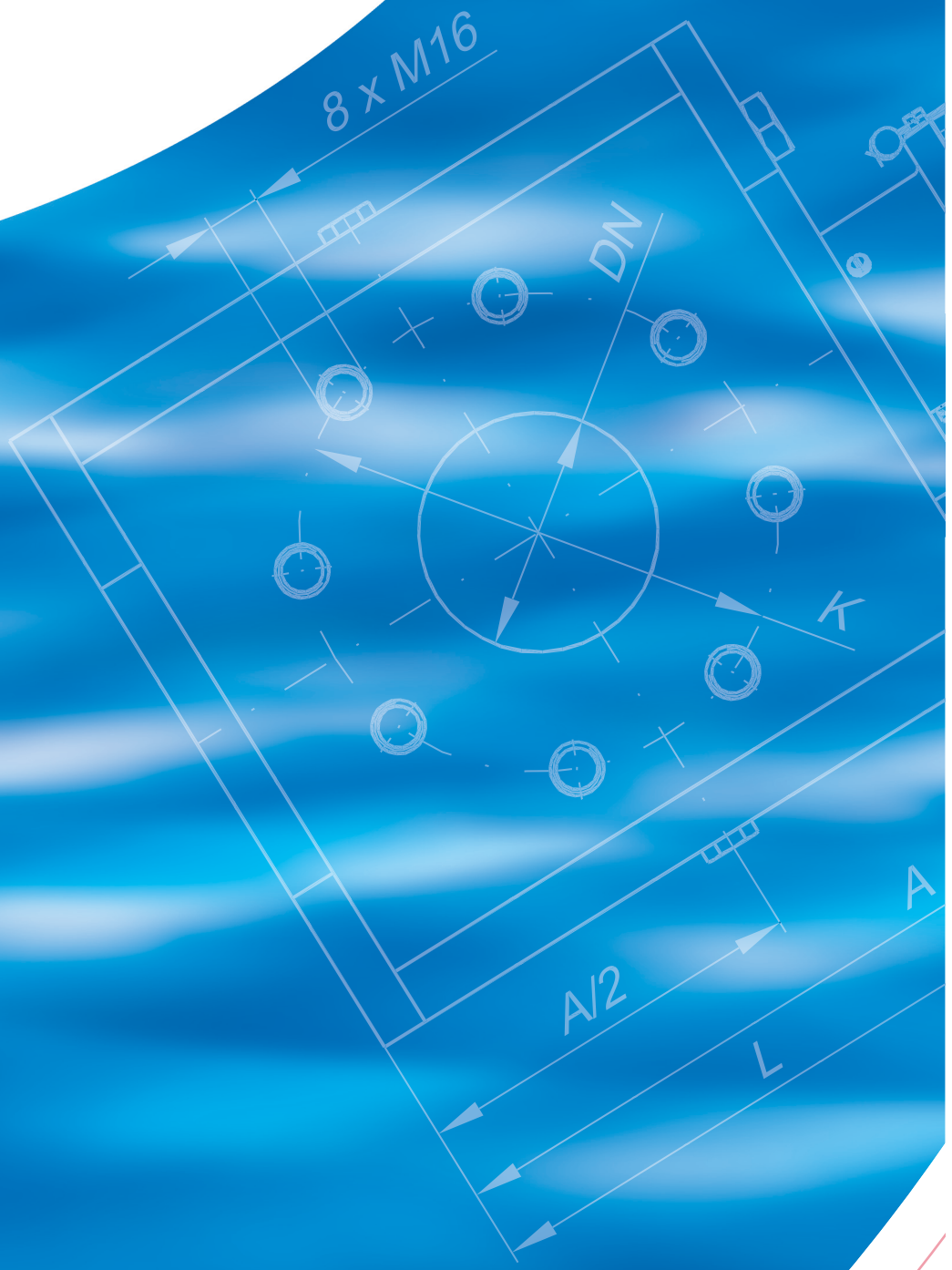

COMMON S.A.
ul. Aleksandrowska 67/93
91-205 Łódź, Poland
tel +48 42 253 66 00
fax +48 42 253 66 99
http://www.common.pl
e-mail: common@common.pl

PR: CGR/EN/01/03.10